
PUSH
&
PULL
CLOSE
PUSH
&
ROTATE

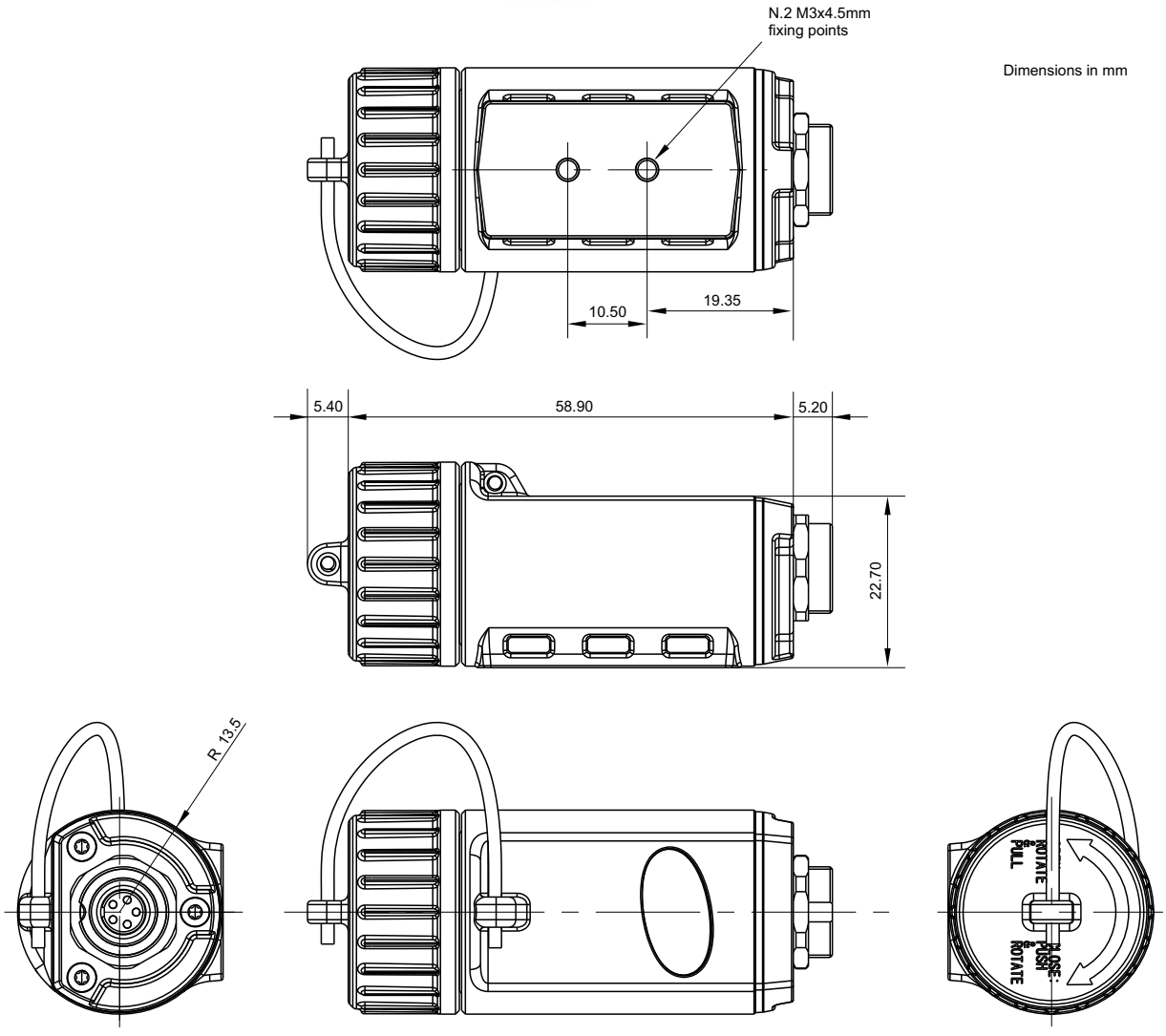
N.2 M3x4.5mm
fixing points
Dimensions in mm
10.50
19.35
5.40
58.90
5.20
22.70
R 13.5
ROTATE
&
PULL
CLOSE
PUSH
&
ROTATE

Technical specifications

ECU connection	1
External Power	9÷15 V on Binder connector or USB-C
Status LED	Yes
Bit Rate Protocol (bit/s)	125 kbit/s, 250 kbit/s, 500 kbit/s, 1 Mbit/s, Auto Baud
Outputs	.xck, .csv, .mf4
Connectors	5 pins Binder 712 female connector + USB-C connector
Memory	4 GB + 16 GB removable USB-C memory key expansion
Material	Anodized aluminum
Fixing	Screws, straps and Velcro
Dimensions	58.9 x 22.7 x R 13.5 mm
Weight	50 g approx.
Waterproof	IP67

Pinout

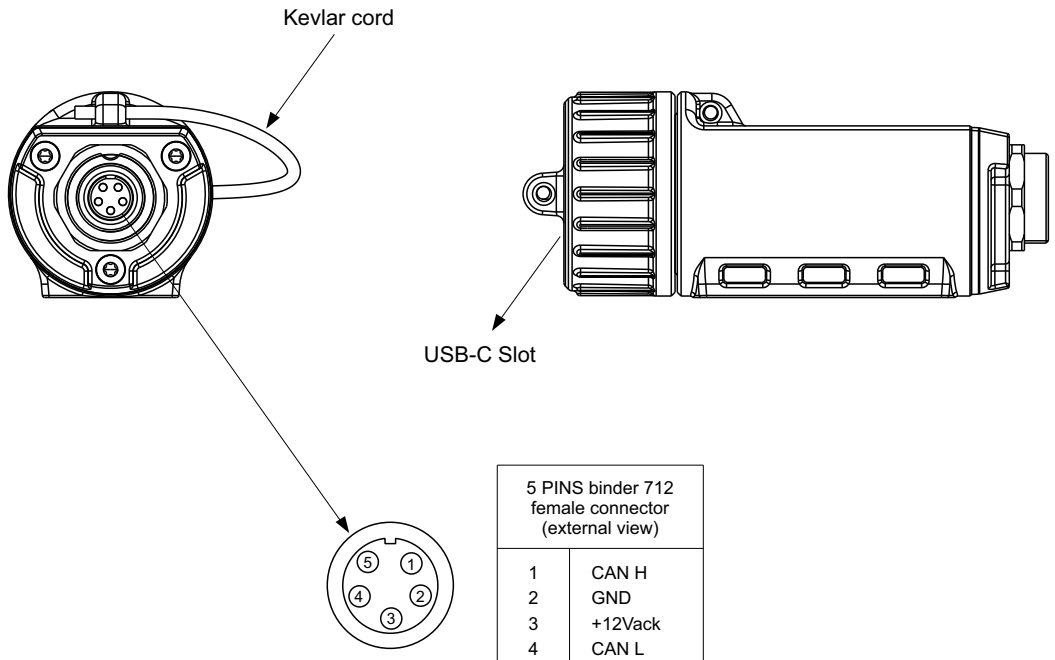

5 PINS binder 712 female connector (external view)	
1	CAN H
2	GND
3	+12Vack
4	CAN L
5	+12Vbext

Connection examples

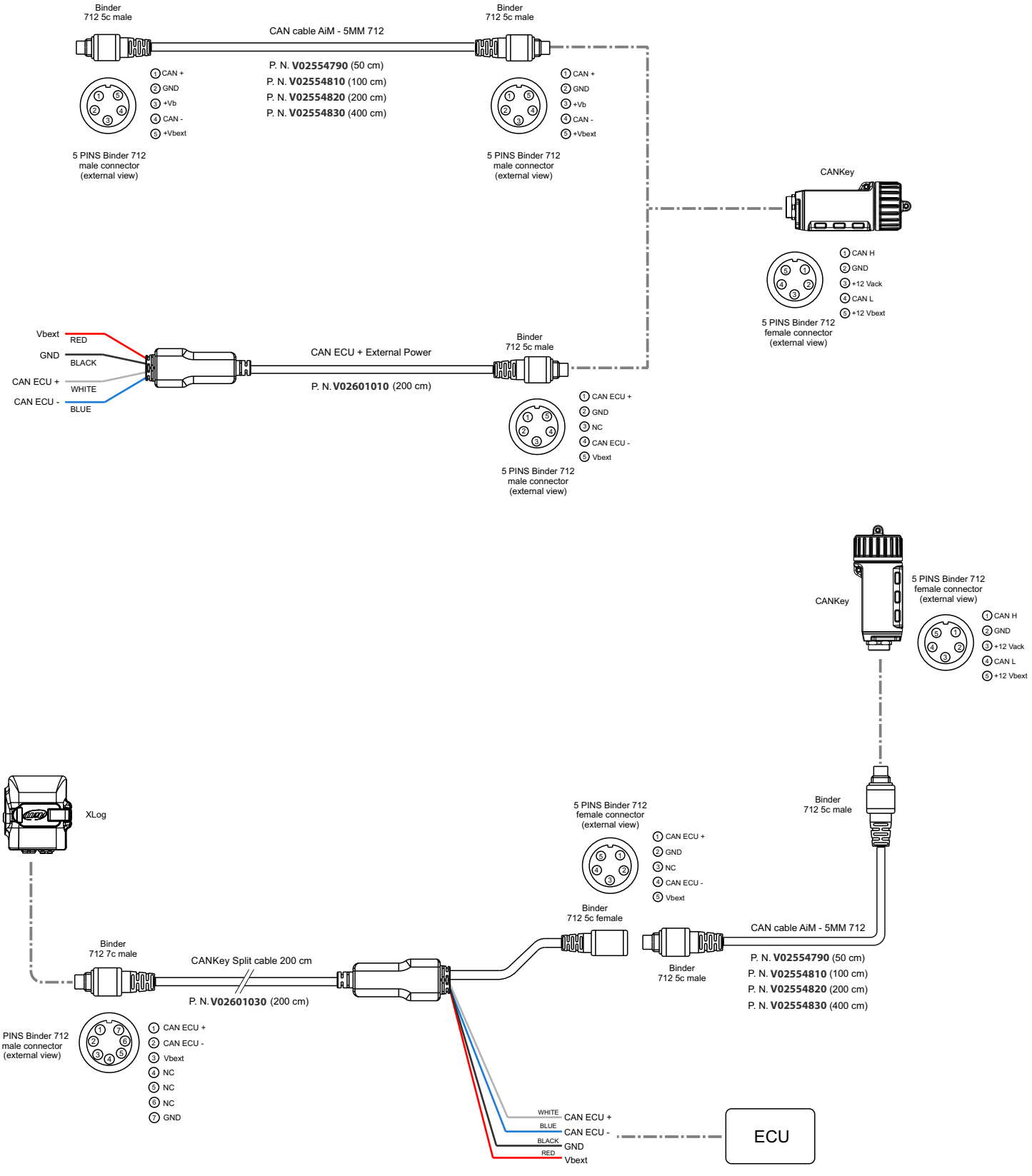

Available kits

Kit 1 CANKey CAN AiM 50

Description	Part number	The kit contains		
CANKey + CAN cable AiM - 5MM 712 50 cm + Mini USB Drive 16 GB	**XCK050CA**	CANKey 	CAN cable AiM - 5MM 712 50 cm 	Mini USB Drive 16 GB 

Kit 2 CANKey CAN AiM 100

Description	Part number	The kit contains		
CANKey + CAN cable AiM - 5MM 712 100 cm + Mini USB Drive 16 GB	**XCK100CA**	CANKey 	CAN cable AiM - 5MM 712 100 cm 	Mini USB Drive 16 GB 

Kit 3 CANKey CAN AiM 200

Description	Part number	The kit contains		
CANKey + CAN cable AiM - 5MM 712 200 cm + Mini USB Drive 16 GB	**XCK200CA**	CANKey 	CAN cable AiM - 5MM 712 200 cm 	Mini USB Drive 16 GB 

Kit 4 CANKey CAN AiM 400

Description	Part number	The kit contains		
CANKey + CAN cable AiM - 5MM 712 400 cm + Mini USB Drive 16 GB	**XCK400CA**	CANKey 	CAN cable AiM - 5MM 712 400 cm 	Mini USB Drive 16 GB 

Kit 5 CANKey CAN ECU 200

Description	Part number	The kit contains		
CANKey + CAN ECU + Ext. Power cable 200 cm + Mini USB Drive 16 GB	**XCK200CE**	CANKey 	CAN ECU + External Power cable 200 cm 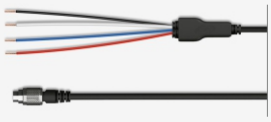	Mini USB Drive 16 GB 

Optionals/Spare parts

Description	Part number	
CAN cable AiM - 5MM 712 50 cm CAN cable AiM - 5MM 712 100 cm CAN cable AiM - 5MM 712 200 cm CAN cable AiM - 5MM 712 400 cm	**V02554790** **V02554810** **V02554820** **V02554830**	
CAN ECU + External Power cable 200 cm	**V02601010**	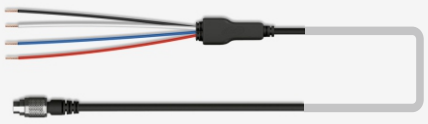
CANKey Split cable 200 cm	**V02601030**	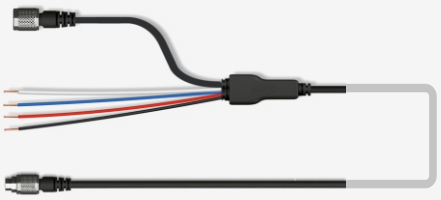
Mini USB Drive 16 GB	**3IRUSBD16GB**	